Bangladesh Army University of Engineering & Technology

Department of Computer Science and Engineering

EEE 1161: Electrical Circuit Analysis

Summer 2024 Semester

Lesson Plan

Lecture-0

Total Credit = 3.0

Course Teacher
Ashik Alam,
Assistant Professor,
Dept. of EEE, BAUET.

Course Content

Basic Knowledge of Electrical Circuit, Measuring the Quantities: Current, Voltage, Resistance.

Standards and Units of Electrical Technology, Network & Circuit Solution: Series, parallel, node and mesh analysis.

Instruments of Measurement: Series and parallel circuits; Network theorem and network analysis; Capacitors, Inductors, Basic of magnetic circuits.

AC Circuit Analysis: Instantaneous current, voltage and power for RLC circuits, Effective current and voltage, average power, Phasor representation of sinusoidal quantities, Single phase circuit, Introduction of three-phase circuits; Power factor and power equation.

Statement of Course Outcome and Mapping

CO	CO Statement	PO	BL	K	P	A	Delivery M & A	Assessment Tools
CO1	Understand the concept of circuit, classification of elements and types of energy sources.	PO1	C2	K2 K3	-	-	Lectures, Text Book, PPT,PDF Handout Tutorial	CP / Presentation, Assignment, CT, SF
CO2	Apply different laws of circuit theorems to solve various engineering problems.	PO2	C3	K2 K3	-	-	Lectures, Text Book, PPT,PDF Handout Tutorial	CP / Presentation, Assignment, CT, SF

Mark Distribution and Assessment

Assessment Method	(%)
Class participation/Presentation skill	05
Class performance	05
Homework/Assignment	05
Class Tests	15
Semester Final Exam	70
Total:	**100**

Book References

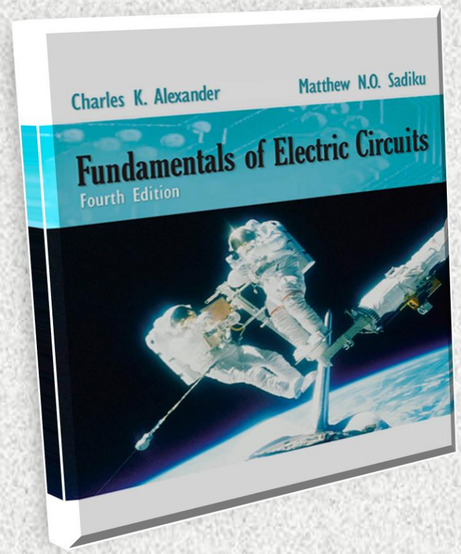

Reference Book:

1	**Fundamental of Electric Circuits**	**Matthew N.O .Sadiku C. K. Alexander**
2	Introductory Circuit Analysis	R L Boylestad, Pearson; 11th edition.

Ohm's law

State Ohm's law?

Ohm's law states that the voltage **v** across a resistor is directly proportional to the current **i** flowing through the resistor.

Georg Simon Ohm (1787–1854), a German physicist, is credited with finding the relationship between current and voltage for a resistor. This relationship is known as *Ohm's law*.

Ohm's law states that the voltage v across a resistor is directly proportional to the current i flowing through the resistor.

That is,

$$v \propto i \tag{2.2}$$

which is the mathematical form of Ohm's law. R in Eq. (2.3) is measured in the unit of ohms, designated as Ω .

What is resistance?

The **resistance** R of an element denotes its ability to resist the flow of electric current; it is measured in ohms (Ω).

We may deduce from Eq. (2.3) that

$$R = \frac{v}{i} \tag{2.4}$$

so that

$$1\ \Omega = 1\ \text{V/A}$$

To apply Ohm's law as stated in Eq. (2.3), we must pay careful attention to the current direction and voltage polarity. The direction of current i and the polarity of voltage v must conform with the passive

Nodes,Branches and Loops

Branches : A branch represents a single element such as a voltage source or a resistor.

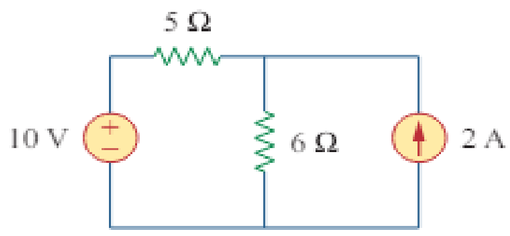

Figure 2.12
For Example 2.4.

Nodes : A node is the point of connection between two or more branches.

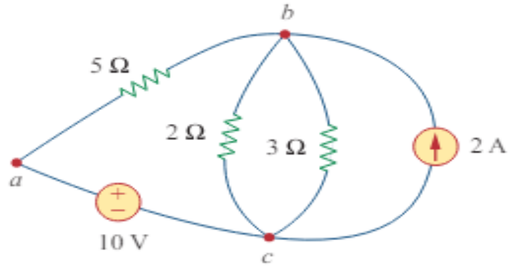

Figure 2.11
The three-node circuit of Fig. 2.10 is redrawn.

Loops : A loop is any closed path in a circuit

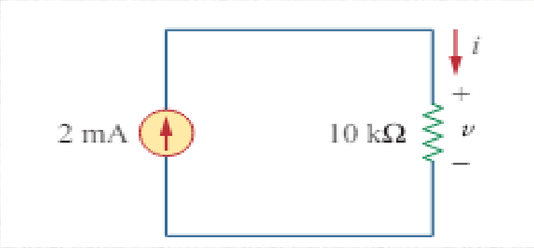

Example 2.4

Determine the number of branches and nodes in the circuit shown in Fig. 2.12. Identify which elements are in series and which are in parallel.

Solution:

Since there are four elements in the circuit, the circuit has four branches: 10 V, 5 Ω, 6 Ω, and 2 A. The circuit has three nodes as identified in Fig. 2.13. The 5-Ω resistor is in series with the 10-V voltage source because the same current would flow in both. The 6-Ω resistor is in parallel with the 2-A current source because both are connected to the same nodes 2 and 3.

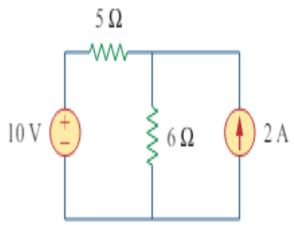

Figure 2.12
For Example 2.4.

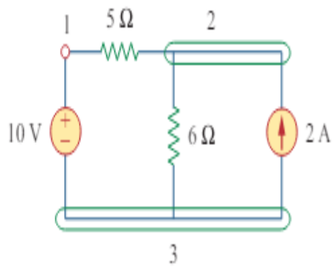

Figure 2.13
The three nodes in the circuit of Fig. 2.12.

Practice Problem 2.4

How many branches and nodes does the circuit in Fig. 2.14 have? Identify the elements that are in series and in parallel.

Answer: Five branches and three nodes are identified in Fig. 2.15. The 1-Ω and 2-Ω resistors are in parallel. The 4-Ω resistor and 10-V source are also in parallel.

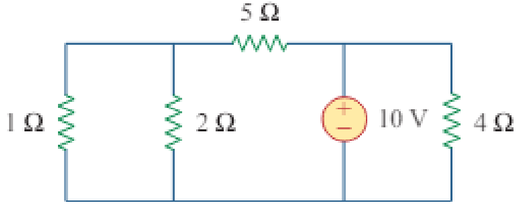

Figure 2.14
For Practice Prob. 2.4.

Kirchhoff's Laws

Kirchhoff's current law (KCL) : Kirchhoff's current law (KCL) states that the algebraic sum of current is zero in any node.

Consider the node in Fig. 2.16. Applying KCL gives

$$i_1 + (-i_2) + i_3 + i_4 + (-i_5) = 0 \qquad (2.16)$$

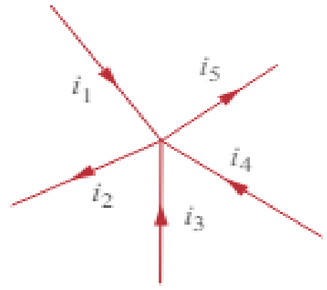

Figure 2.16
Currents at a node illustrating KCL.

In other words, the sum of entering current is equal to the sum of outgoing current in any node.

Incoming current = Outgoing current

since currents i_1, i_3, and i_4 are entering the node, while currents i_2 and i_5 are leaving it. By rearranging the terms, we get

$$i_1 + i_3 + i_4 = i_2 + i_5 \qquad (2.17)$$

Example 2.7

Find current i_o and voltage v_o in the circuit shown in Fig. 2.25.

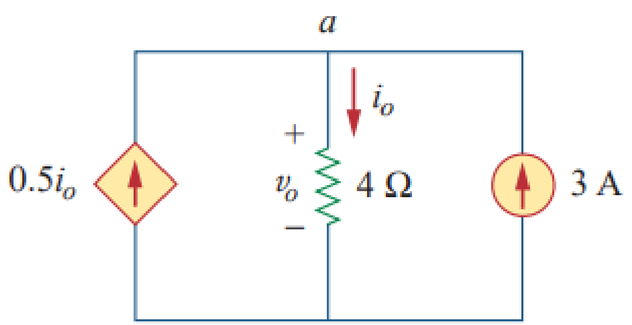

Solution:

Applying KCL to node a, we obtain

$$3 + 0.5i_o = i_o \quad \Rightarrow \quad i_o = 6 \text{ A}$$

For the 4-Ω resistor, Ohm's law gives

$$v_o = 4i_o = 24 \text{ V}$$

Practice Problem 2.7

Find v_o and i_o in the circuit of Fig. 2.26.

Answer: 8 V, 4 A.

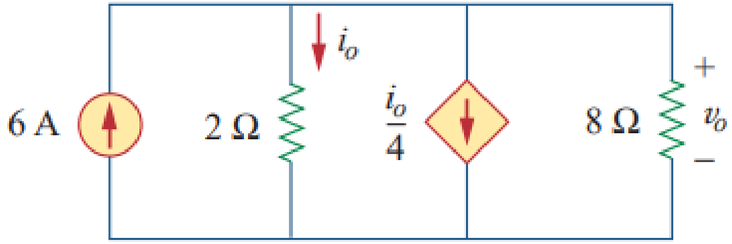

Kirchhoff's voltage law (KVL)

Kirchhoff's voltage law (KVL) : Kirchhoff's voltage law (KVL) states that the algebraic sum of voltage is zero in any loop.

Thus, KVL yields

$$-v_1 + v_2 + v_3 - v_4 + v_5 = 0 \qquad (2.20)$$

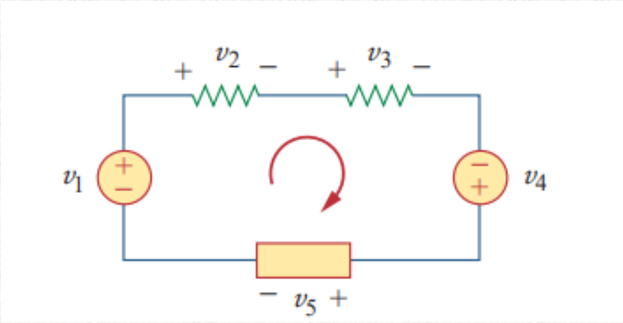

In other words, we can say the sum of voltage rise is equal to the voltage drop in any loop

Voltage rise = Voltage drop

Rearranging terms gives

$$v_2 + v_3 + v_5 = v_1 + v_4 \qquad (2.21)$$

Example 2.5

For the circuit in Fig. 2.21(a), find voltages v_1 and v_2.

Solution:

To find v_1 and v_2, we apply Ohm's law and Kirchhoff's voltage law. Assume that current i flows through the loop as shown in Fig. 2.21(b). From Ohm's law,

$$v_1 = 2i, \qquad v_2 = -3i \tag{2.5.1}$$

Applying KVL around the loop gives

$$-20 + v_1 - v_2 = 0 \tag{2.5.2}$$

Substituting Eq. (2.5.1) into Eq. (2.5.2), we obtain

$$-20 + 2i + 3i = 0 \qquad \text{or} \qquad 5i = 20 \qquad \Rightarrow \qquad i = 4\text{ A}$$

Substituting i in Eq. (2.5.1) finally gives

$$v_1 = 8\text{ V}, \qquad v_2 = -12\text{ V}$$

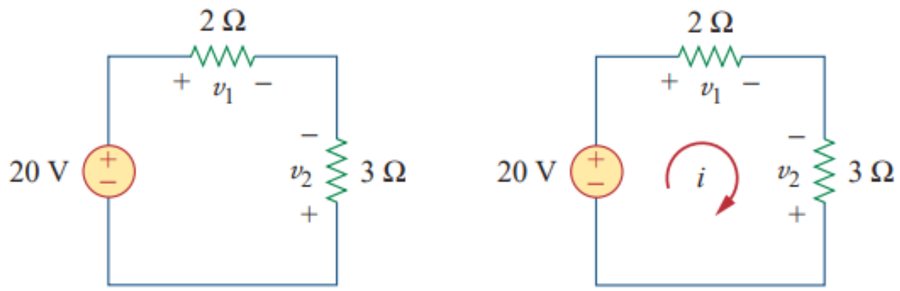

(a) (b)

Find v_1 and v_2 in the circuit of Fig. 2.22.

Practice Problem 2.5

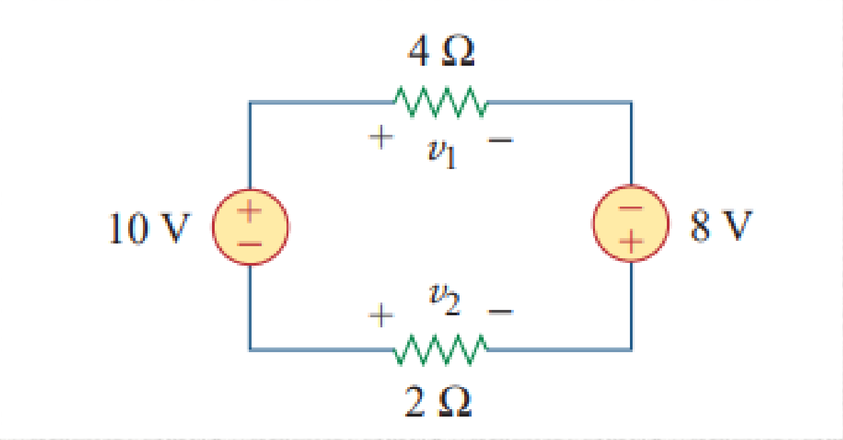

Fig. 2.22

Answer: 12 V, −6 V.

Problems with dependent sources

Determine v_o and i in the circuit shown in Fig. 2.23(a). **Example 2.6**

(a) (b)

Figure 2.23
For Example 2.6.

Solution:
We apply KVL around the loop as shown in Fig. 2.23(b). The result is

$$-12 + 4i + 2v_o - 4 + 6i = 0 \qquad \textbf{(2.6.1)}$$

Applying Ohm's law to the 6-Ω resistor gives

$$v_o = -6i \qquad \textbf{(2.6.2)}$$

Substituting Eq. (2.6.2) into Eq. (2.6.1) yields

$$-16 + 10i - 12i = 0 \quad \Rightarrow \quad i = -8 \text{ A}$$

and $v_o = 48$ V.

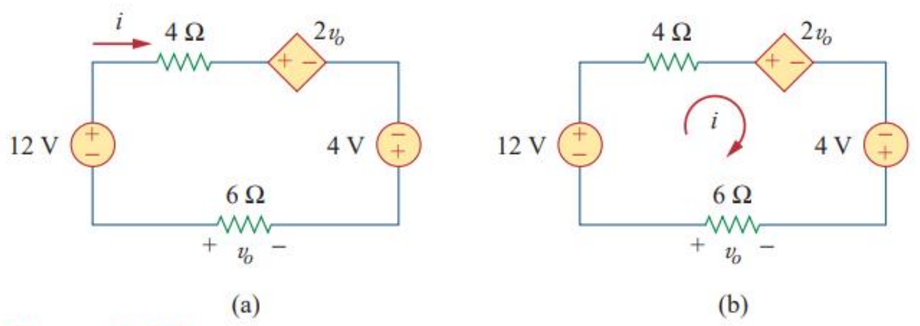

Figure 2.23
For Example 2.6.

Find v_x and v_o in the circuit of Fig. 2.24. **Practice Problem 2.6**

Answer: 10 V, −5 V.

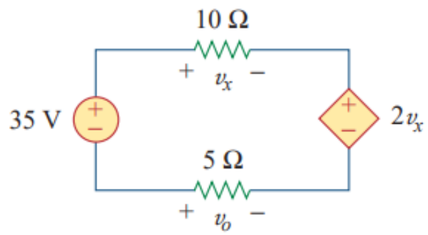

Figure 2.24
For Practice Prob. 2.6.

Example 2.7

Find current i_o and voltage v_o in the circuit shown in Fig. 2.25.

Solution:

Applying KCL to node a, we obtain

$$3 + 0.5i_o = i_o \quad \Rightarrow \quad i_o = 6 \text{ A}$$

For the 4-Ω resistor, Ohm's law gives

$$v_o = 4i_o = 24 \text{ V}$$

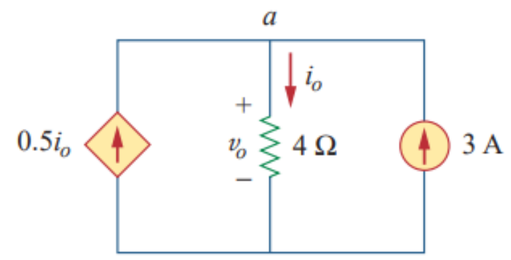

Figure 2.25
For Example 2.7.

Practice Problem 2.7

Find v_o and i_o in the circuit of Fig. 2.26.

Answer: 8 V, 4 A.

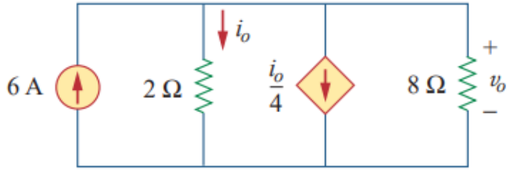

Figure 2.26
For Practice Prob. 2.7.

Series connection & equivalent resistance

Series connection: When there is only one common node and same current is flowing through them then it is called series connection.

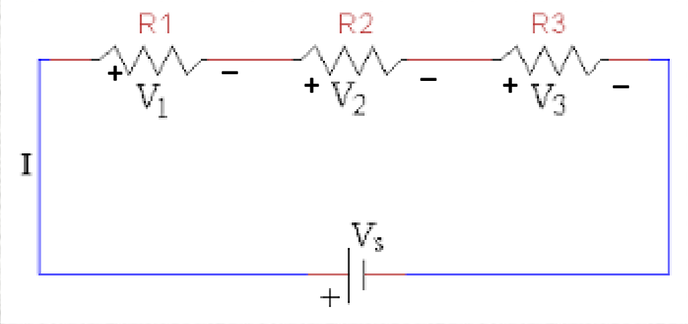

Series equivalent resistance: The equivalent resistance of any number of resistors connected in series is the sum of the individual resistances.

So the equivalent resistance is:

$$R_{eq} = R_1 + R_2$$

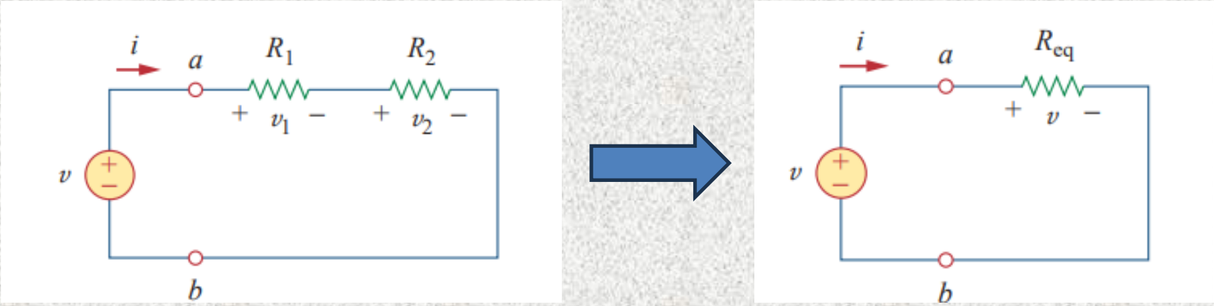

Characteristics:

1. **Positive terminal is connected to the negative terminal.**
2. **There is only one common node**
3. **Current is always same in series connection.**
4. **In a series connection the voltage drops or rises. So voltage is not same.**

Parallel connection & equivalent resistance

Parallel connection When there are two common node and same voltage difference then the connection is called parallel connection.

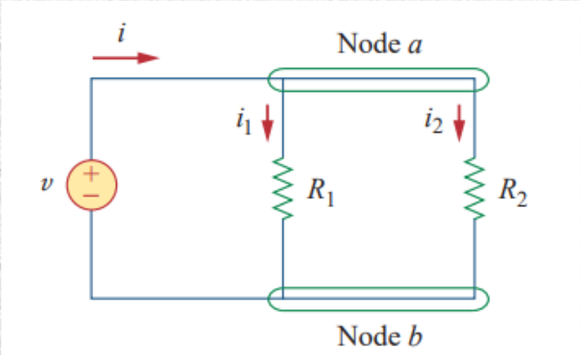

Parallel equivalent resistance: The equivalent resistance of two parallel resistors is equal to the product of their resistances divided by their sum.

So the equivalent resistance is:

$$\frac{1}{R_{eq}} = \frac{1}{R_1} + \frac{1}{R_2}$$

$$\frac{1}{R_{eq}} = \frac{R_1 + R_2}{R_1 R_2}$$

$$\boxed{R_{eq} = \frac{R_1 R_2}{R_1 + R_2}}$$

Characteristics :

1. **There are two common node in this connection.**
2. **The voltage difference is same in this connection.**

Current Divider Rule (CDR) & Voltage Divider Rule (VDR)

CDR:

When two or more elements are connected in parallel then the current is divided by the current divider rule (CDR).

$$i_1 = \frac{R_2\, i}{R_1 + R_2}, \qquad i_2 = \frac{R_1\, i}{R_1 + R_2}$$

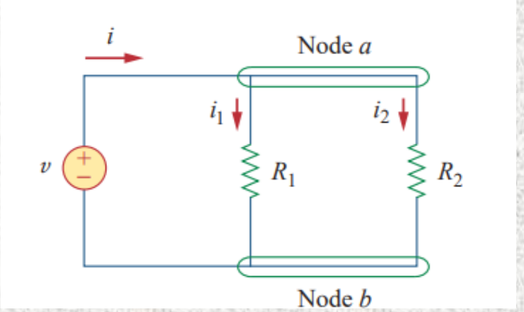

VDR:

When two or more elements are connected in series then the voltage is divided by the voltage divider rule (VDR)

$$v_1 = \frac{R_1}{R_1 + R_2} v, \qquad v_2 = \frac{R_2}{R_1 + R_2} v$$

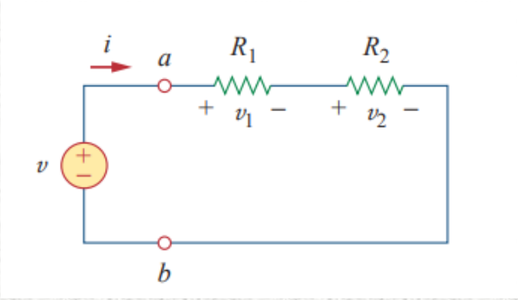

Wye-Delta Transformation

Delta to Wye Conversion: Each resistor in the Y network is the product of the resistors in the two adjacent branches, divided by the sum of the three resistors

$$R_1 = \frac{R_b R_c}{R_a + R_b + R_c}$$

$$R_2 = \frac{R_c R_a}{R_a + R_b + R_c}$$

$$R_3 = \frac{R_a R_b}{R_a + R_b + R_c}$$

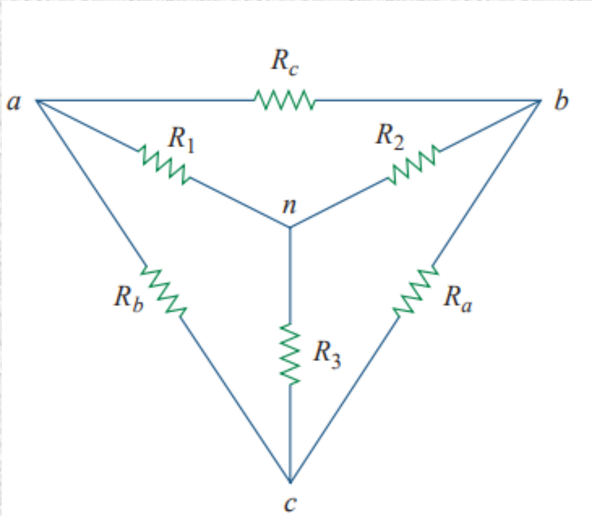

Delta to Wye

Wye to Delta Conversion: Each resistor in the network is the sum of all possible products of Y resistors taken two at a time, divided by the opposite Y resistor.

$$R_a = \frac{R_1R_2 + R_2R_3 + R_3R_1}{R_1}$$

$$R_b = \frac{R_1R_2 + R_2R_3 + R_3R_1}{R_2}$$

$$R_c = \frac{R_1R_2 + R_2R_3 + R_3R_1}{R_3}$$

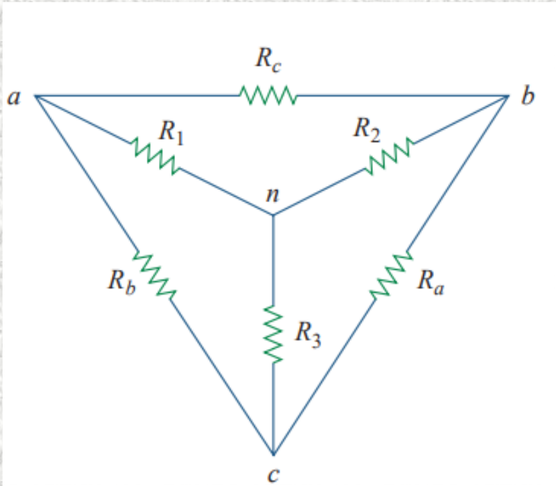

Convert the Δ network in Fig. 2.50(a) to an equivalent Y network.

Example 2.14

Solution:

Using Eqs. (2.49) to (2.51), we obtain

$$R_1 = \frac{R_b R_c}{R_a + R_b + R_c} = \frac{10 \times 25}{15 + 10 + 25} = \frac{250}{50} = 5\ \Omega$$

$$R_2 = \frac{R_c R_a}{R_a + R_b + R_c} = \frac{25 \times 15}{50} = 7.5\ \Omega$$

$$R_3 = \frac{R_a R_b}{R_a + R_b + R_c} = \frac{15 \times 10}{50} = 3\ \Omega$$

The equivalent Y network is shown in Fig. 2.50(b).

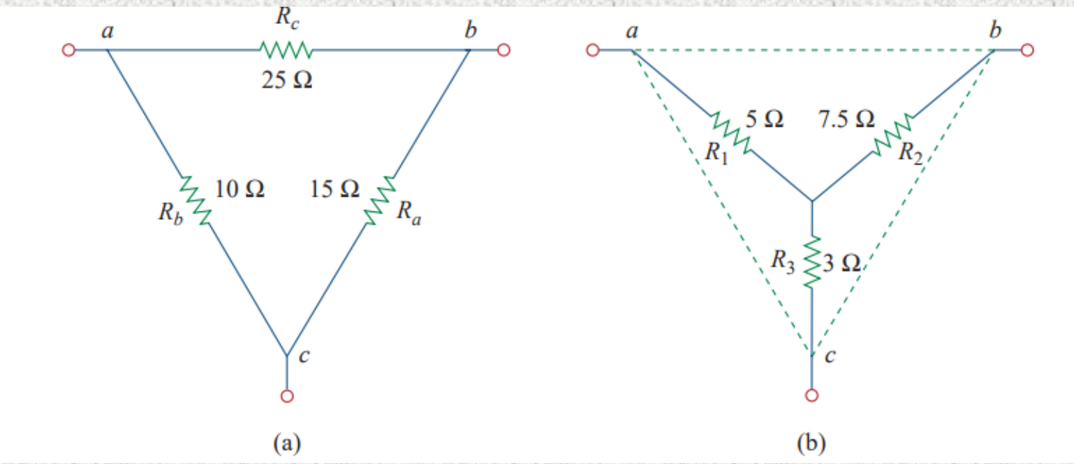

Practice Problem 2.14

Transform the wye network in Fig. 2.51 to a delta network.

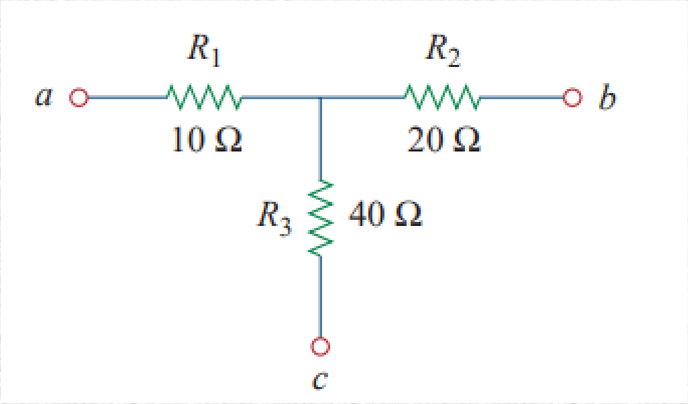

Answer: $R_a = 140\ \Omega$, $R_b = 70\ \Omega$, $R_c = 35\ \Omega$.

Practice Problem 2.15

For the bridge network in Fig. 2.54, find R_{ab} and i.

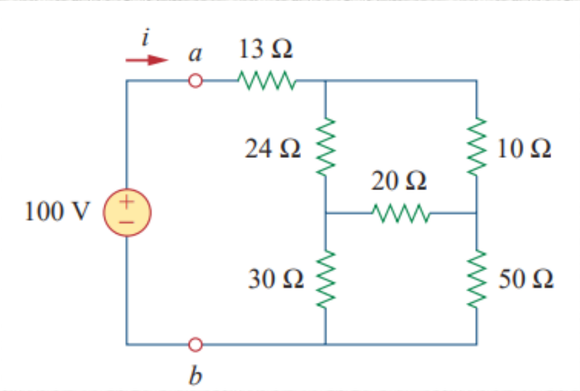

Answer: 40 Ω, 2.5 A.

Thank you